B315-135 后倾离心风机
B315-135 Backward Centrifugal Fan

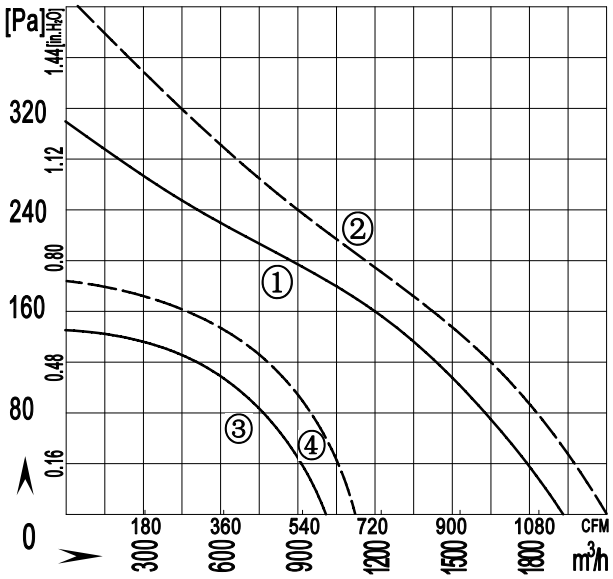

风轮材质：铝合金板材 material:Sheet aluminium

防护等级：IP54 Protection Class: IP54

认　　证：CCC CE Approvals: CCC CE

绝缘等级：F级 Insulation class: F
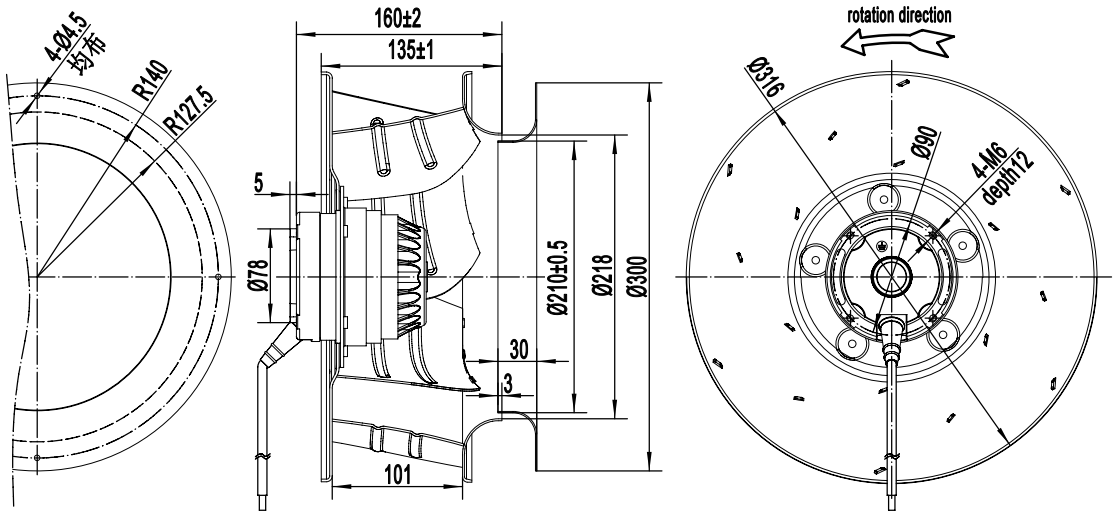
Type	Voltage V	Frequency Hz	Current A	Input Power W	Speed rpm	Capacitor μF	Air Flow m^3/h / CFM	Noise dB(A)	Temperature Min / Max(℃)	Curve No. #	Approvals
B4E315-135A-AL00	220/230	50	0.60	135	1400	3	1900/1117	63	-30 / +60	①	CCC ,CE,RoHS
	220/230	60	0.80	180	1580	3	2000/1175	65	-30 / +60	②	
B6E315-135A-AL00	220/230	50	0.38	75	940	3	1000/588	58	-30 / +60	③	CCC ,CE,RoHS
	220/230	60	0.42	85	1050	3	1100/647	60	-30 / +60	④	
B4D315-135A-AL00	380/400	50	0.35	136	1400	/	1900/1117	63	-30 / +60	①	CCC ,CE,RoHS
	380/400	60	0.40	175	1580	/	2000/1175	65	-30 / +60	②