DC AXIAL FAN

120x120x25mm

RS1225 Series

外框材质:环保防火PBT
Frame:Thermoplastic PBT UL94-V0
扇叶材质:环保防火PBT
Imperller:Thermoplastic PBT UL94-V0
轴承结构:双滚珠或长寿命含油结构
Bearing system:2Ball or Long life sleeve
单体风扇重量:125g
Unit Weight:125g

DIMENSIONS DRAWING

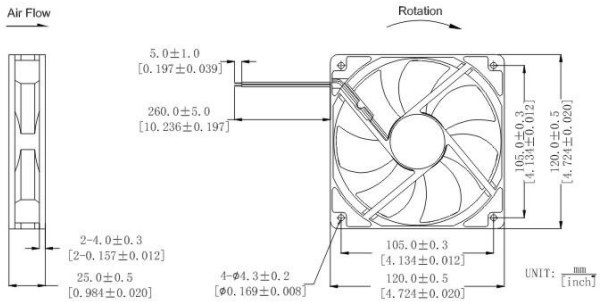

可选的功能参照列表
(Available Functions)

1.马达保护(Motor protection)

RP	SS	AS	CL
●	●	●	●

2.信号输出(Signal output)

FG	RD	RD	LD
●	●	●	●

3.调速方式(Speed control mode)

PWM	TP	VC	RC	CS
●	●	●	●	●

Fan Performance Curve

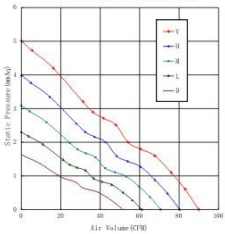

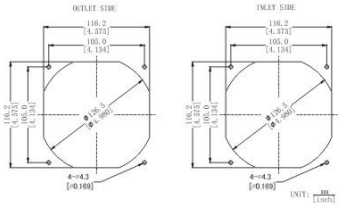

Part Number	Voltage(V)	Current(A)	Power(W)	Speed(RPM)	Air flow(Q)		Pressure(P)		Noise(dBA)
产品编号	电压范围	额定电流	功率	转速	(CFM)风量	m^3/min	(mmAq)风压	(In H_2O)	噪音
RS1225X12D	12(7~14)	0.12	1.44	1500	51.39	1.45	1.63	0.06	27.0
RS1225X12L		0.16	1.92	1800	61.03	1.73	2.30	0.09	32.2
RS1225X12M		0.23	2.76	2100	70.69	2.00	3.08	0.12	35.5
RS1225X12H		0.30	3.6	2400	80.31	2.27	3.98	0.16	39.0
RS1225X12VH		0.38	4.56	2700	89.94	2.54	5.00	0.20	42.3
RS1225X24D	24(15~27)	0.06	1.44	1500	51.39	1.45	1.63	0.06	27.0
RS1225X24L		0.08	1.92	1800	61.03	1.73	2.30	0.09	32.2
RS1225X24M		0.12	2.88	2100	70.69	2.00	3.08	0.12	35.5
RS1225X24H		0.15	3.6	2400	80.31	2.27	3.98	0.16	39.0
RS1225X24VH		0.19	4.56	2700	89.94	2.54	5.00	0.20	42.3

★ 如果您需要的转速或电压或功能不在这份清单上，请与我们业务联系。
If you want another rpm or voltage or functions which one is not in the list,please contact with our sales.

★ 提示1:功能的具体信息参照产品目录前页篇章。
Notes1:The catalog have detail information in the front page for the functions.

★ 提示2:产品详细信息请参照承认书。
Notes2:Product have a detail in the approval sheet.

★ 提示3:产品规格变更不另行通知。
Notes3:Specifications are subject to change without notice.