ϕ172mm San Ace 172W

General Specifications

- Material ····· Frame: Aluminum, Impeller: Plastics (Flammability: UL94V-1)
- Expected Life ····· Refer to specifications (Indoor, L10:Survival rate: 90% at 60℃, rated voltage, and continuously run in a free air state)
- Lead Wire ····· ⊕red ⊖black or blue (Sensor) yellow
- Storage Temperature ···−30℃ to +70℃ (Non-condensing)

ϕ172mm×150mm×51mm (Mass : 860g) IP 68 9WE type Sidecut type

Specifications

The following nos. **have pulse sensors.**

Model No.	Rated Voltage [V]	Operating Voltage Range [V]	Rated Current [A]	Rated Input [W]	Rated Speed [min⁻¹]	Max. Airflow [m³/min]	Max. Airflow [CFM]	Max. Static Pressure [Pa]	Max. Static Pressure [inchH₂O]	SPL [dB(A)]	Operating Temperature [℃]	Expected Life [h]
9WE5724K501	24	20.4 to 27.6	1.3	31.2	4,100	8.5	300	243	0.976	60	− 20 to + 60	40,000/60℃
9WE5748K501	48	40.8 to 55.2	0.7	33.6	4,100	8.5	300	243	0.976	60		40,000/60℃

Other sensor specifications are available as options. Please refer to the index (p. 511).

Dimensions (unit: mm)

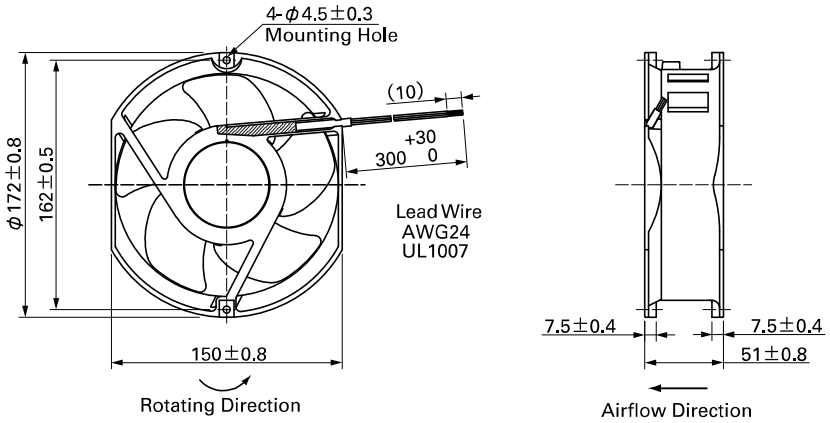

Reference Dimensions of Mounting Holes and Vent Opening (unit: mm)

Inlet side, Outlet side

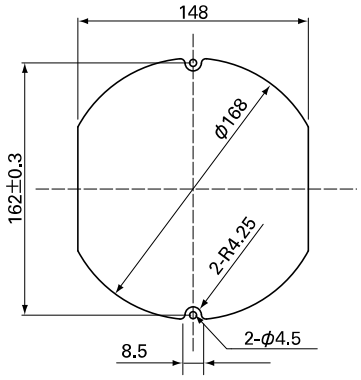

Options (unit: mm)

Finger Guards

Model : 109-319E Surface treatment : Nickel-chrome plating (silver) Color
: 109-319H : Cation electropainting (black)

Inlet side, Outlet side

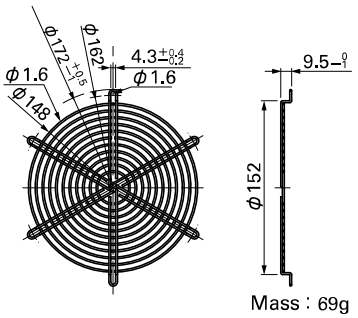

Mass : 69g

Model : 109-320 Surface treatment : Nickel-chrome plating (silver) Color

Outlet side

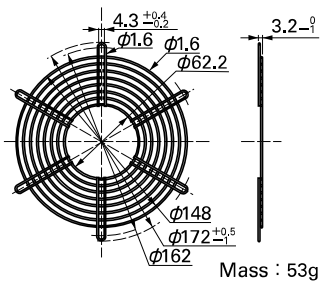

Mass : 53g

Airflow - Static Pressure Characteristics

K speed

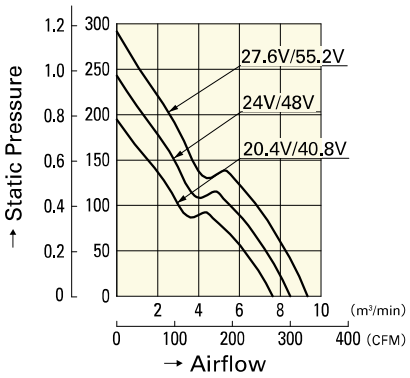

9WE5724K501
9WE5748K501